Architectural Series, Fire Protection Cabinet, Cosmopolitan - C1037F10FX2

FE FX2 CABINET, COSMOPOLITAN, 3" RT, FULL VIEW, CLR ACR, CRS TUB, SS#4 DR/TRM, 10 TUB

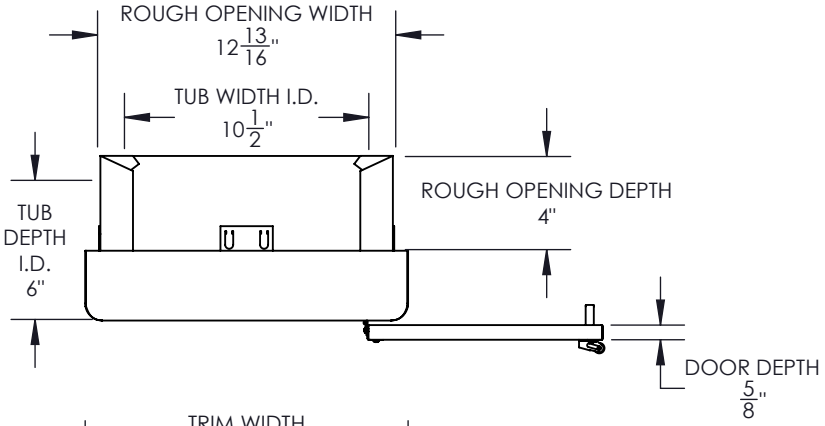

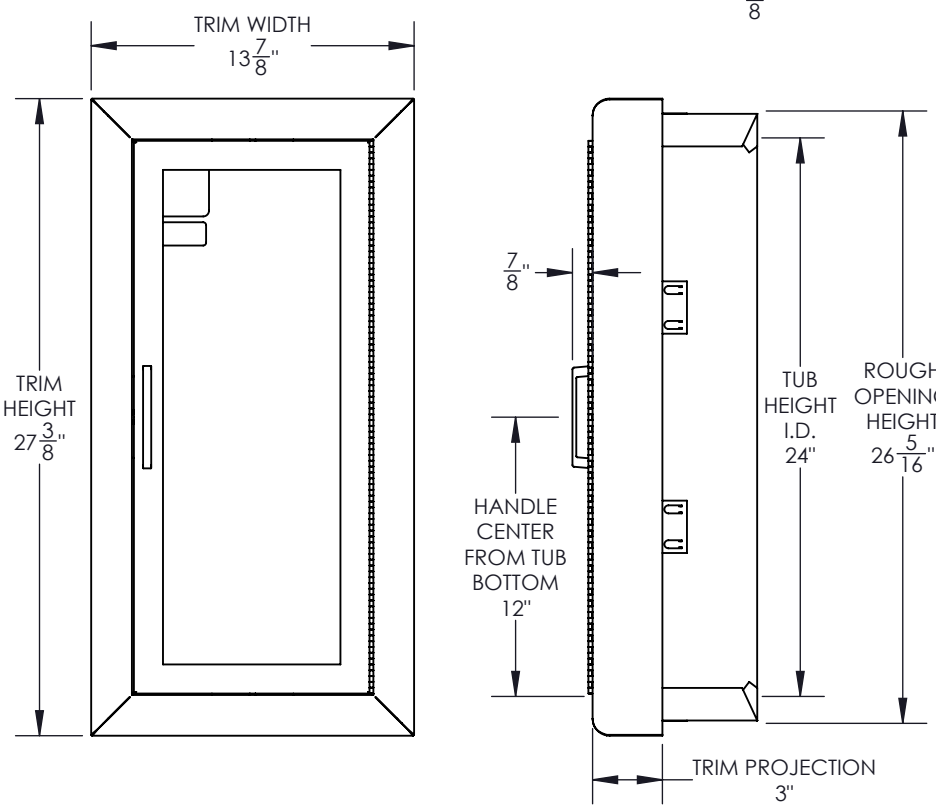

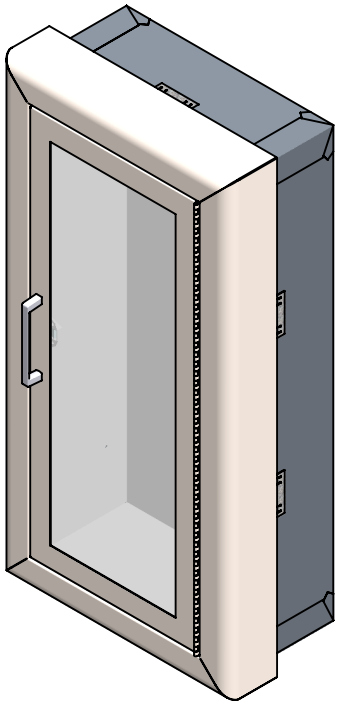

SPECIFICATIONS:

Tub Material: 24 gauge galvanized steel

Trim Material & Style: 18 gauge stainless steel, semi-recessed 3" rolled edge

Door Material & Style: 20 gauge stainless steel, full view

Flange Material: 22 gauge galvannealed steel

Glazing: 0.090" clear acrylic (8-½" x 22-¾")

Finish: #4 satin door and trim, painted white tub

Hinge: Continuous hinge opens door 180 degrees, 20 gauge stainless steel

Hardware: Zinc plated pull handle, roller catch, glass clips & screws

Rough Opening: 12-13/16" x 26-5/16" x 4"

Fire Rating: UL classified and labeled up to 2 hours in accordance with UL 1479 (ASTM-E814) and CAN/USC-S115.

Insulation: Foil-faced mineral wool

ADA Compliant: Cabinet meets 4" maximum protrusion, locate handle maximum 48" above floor

Compatible Extinguisher: Cosmic, Galaxy 2.5 - 10lb, Mercury 2.5 - 5lb, Sentinel 5lb

MODEL # BREAKDOWN:

C — Product Line: Fire protection, cabinet

10 — Tub Size: 10-½" x 24" x 6"

3 — Trim and Door Material: SS, #4 satin finish

7 — Trim Style: Semi-recessed 3" rolled edge

F — Door Style: Full view, pull handle, roller catch

10 — Door Glazing: 0.090" clear acrylic

FX2 — Fire Rated

REPLACEMENT PARTS:

Tub: TUB-10-7FX2

Trim: T-1037

Door: D-103F

Glazing: G10F10

Hardware Pack: HPFPUS

MODEL #: C1037F10FX2

JL INDUSTRIES

800-554-6077

sales@activarcpg.com

www.activarcpg.com

9702 Newton Ave S. Bloomington, MN 55431 | Many Locations Nationwide

Distributor:		Project:
Contractor:		Approved By:
Date:	Quantity:	Architect:
Scale: 1:8.25	Pages: 1 OF 1	Drawing #: C1037F10FX2-SUBMITTAL

© 2026 Activar Construction Products Group, Inc. THE INFORMATION CONTAINED IN THIS DRAWING IS THE SOLE PROPERTY OF ACTIVAR CONSTRUCTION PRODUCTS GROUP, INC. ANY REPRODUCTION IN PART OR AS A WHOLE WITHOUT THE WRITTEN PERMISSION OF ACTIVAR CONSTRUCTION PRODUCTS GROUP, INC. IS PROHIBITED.

REV: A 11/3/2026