SUBMITTAL: AMBASSADOR™ STEEL FIRE-FX2™ FIRE EXTINGUISHER CABINETS - TRIMLESS RECESSED

The Ambassador Series is a Durable, Attractive Steel Cabinet with Powder-coat Finish that Stands up to Long term Use. The FX2 Fire-Rated Trimless Series is Designed to be Installed Between the layers of Drywall or Under Plaster for a Flush, Finished Surface.

Door Construction: Cold rolled steel with white powder-coated finish standard. Flush cabinet doors are attached by a continuous hinge and equipped with zinc-plated handle and roller catch.

Flange for Drywall, Stucco or Plaster: 1-1/2" wide recessed flange is to be concealed by drywall, stucco or plaster. *5/8" Drywall* - first layer of drywall is to be installed before cabinet, second layer over flange after cabinet is installed. *3/4" depth Plaster or Stucco* - fire-rated substrate is to be installed before cabinet, and plaster applied after cabinet is installed.

Tub: The tub is constructed of cold rolled steel with white powder-coat finish standard. Tub forms a flange to cover cut edges of wallboard material. Fire-resistant material is attached to the exterior of the tub.

Fire Rating: Fire-FX2™ cabinets are UL listed and labeled as an approved membrane penetration firestop system for up to 2 hours in accordance with UL 1479 (ASTM-E814) and CAN/ULC-S115, when properly installed in a wall assembly according to installation instructions.

c UL us LISTED



1014WV10FX2

STEP 1: SELECT MODEL NUMBER AND QUANTITY ON CHART (refer to chart on pg 2)

STEP 2: SELECT DOOR STYLE WITH HANDLE Check one box below Examples on Page 2

- ☐ **F** Full Glazing in 1-1/4" wide Frame
- ☐ **G** Full Glazing with SAF-T-LOK™ in 1-1/4" Frame
- ☐ **D** Horizontal Duo Panel
- ☐ **E** Horizontal Duo Panel with SAF-T-LOK™
- ☐ **S21** Solid Door
- ☐ **L22** Solid with SAF-T-LOK™
- ☐ **L24** Sold with Cylinder Lock - No Handle
- ☐ **V** Vertical Duo
- ☐ **W** Vertical Duo with SAF-T-LOK™
- ☐ **B** Solid with 2" x 4" View Window & SAF-T-LOK™

STEP 3: SELECT DOOR GLAZING (Check one box below)

- ☐ **10** Clear Acrylic
- ☐ **13** Wire Glass with Safety Film
- ☐ **15** Bronze Acrylic
- ☐ **16** Gray Acrylic
- ☐ **17** Clear Tempered Glass
- ☐ **18** Laminated Safety Glass

STEP 4: OPTIONAL FEATURES AT ADDED COST (SELECT ANY)

- ☐ Futura "Fire" Pull ____ Mill Alum ____ Red ____ White
- ☐ Flush Recessed Pull Handle **(PRH)**
- ☐ Polished Chrome Handle (**PUCH)**
- ☐ Optional Colors: Tub, Hinge and Door will be painted In a single color - select from below.

___ Sand ___ AMS Beige ___ SC Flat Beige ___ Red ___ Gray ___ Bronze ___ Silver Black ___ Flat Black

- ☐ Black Vertical FE Letters **LDCVBFE**
- ☐ Red Vertical FE Letters **LDCVRFE**
- ☐ White Vertical FE Letters **LDCVWFE**
- ☐ Black Horizontal FE Letters **LDCHBFE**
- ☐ Red Horizontal FE Letters **LDCHRFE**
- ☐ White Horizontal FE Letters **LDCHWFE**
- ☐ Black Vertical Decal **LDVBFE**
- ☐ Red Vertical Decal **LDVRFE**
- ☐ White Vertical Decal **LDVWFE**
- ☐ Black Horizontal Decal **LDHBFE**
- ☐ Red Horizontal Decal **LDHRFE**
- ☐ White Horizontal Decal **LDHWFE**
- ☐ **(CA)** Commander Alarm
- ☐ **(BA)** Brigadier Alarm
- ☐ Etched or Engraved Lettering in Glass or Metal -. Attach Separate Submittal to order.

For More Information on Options See Website

It is the responsibility of the customer to communicate specifications and product performance requirements that are needed for their application. This document is intended to convey potential product configurations and offerings. It is not to be used to imply or represent a specification or rating, of finished products shipped. Detailed, specific submittals can be created upon request. It is the responsibility of the customer to specify product accordingly to comply with local laws, codes, and ordinances.

Established 1999 FIRE SAFETY SUPPLY OEM Distributor

800-498-3473

sales@firesafetysupply.net

www.firesafetysupply.net

Distributor:		Project:
Contractor:		Approved By:
Date:	Quantity:	Architect:
Scale: N/A	Pages: 1 of 1	Item #

@ 2024 Activar Construction Products Group, Inc.

The information contained in this document is the sole property of Activar Construction Products Group, Inc. Any reproduction in part of as a whole without the written permission of Activar Construction Products Group, Inc. is prohibited.

3/19/2024

SUBMITTAL: AMBASSADOR STEEL FIRE-FX2™ FIRE EXTINGUISHER CABINETS - TRIMLESS RECESSED

TRIM & DOOR SERIES #			Tub I.D.			Frame O.D.		Wall Opening			Fits Fire Extinguishers
QTY	Model	Trim Style	A Width	B Height	C Depth	E Width	F Height	W Width	H Height	D Depth	
TRIMLESS CABINET WITH RECESSED FLANGE FOR INSTALLATION OF 5/8" DRYWALL OVER AND UNDER FLANGE Example of Part # 1014WF10FX2											
	8114W_FX2	Trimless● Drywall	9	18	5 1/2	12 1/8	21 1/8	11 5/16	20 5/16	6 3/16	Cosmic & Galaxy 2 1/2-6 (6lb must be mounted on cabinet tub), Mercury 2 1/2- 5
	1014W_FX2	Trimless● Drywall	10 1/2	24	6	13 5/8	27 1/8	12 13/16	26 5/16	6 11/16	Cosmic & Galaxy 2 1/2-10 Mercury 2 1/2-5 , Sentinel 5
	2014W_FX2	Trimless● Drywall	12	27	7 3/4	15 1/8	30 1/8	14 5/16	29 5/16	8 7/16	Any Cosmic or Galaxy (20 lb must be mounted to back of tub), Mercury, Saturn or Grenadier P, Sentinel 5 & 10, Nebula 270
TRIMLESS CABINET WITH RECESSED FLANGE FOR INSTALLATION OF 3/4" PLASTER OVER FLANGE Example of Part # 8114PF10FX2											
	8114P_FX2	Trimless● Plaster	9	18	5 1/2	12 1/8	21 1/8	11 5/16	20 5/16	6 1/16	Cosmic & Galaxy 2 1/2-6 (6lb must be mounted on cabinet tub), Mercury 2 1/2- 5
	1014P_FX2	Trimless● Plaster	10 1/2	24	6	13 5/8	27 1/8	12 13/16	26 5/16	6 9/16	Cosmic & Galaxy 2 1/2-10 Mercury 2 1/2-5 , Sentinel 5
	2014P_FX2	Trimless● Plaster	12	27	7 3/4	15 1/8	30 1/8	14 5/16	29 5/16	8 5/16	Any Cosmic or Galaxy (20 lb must be mounted to back of tub), Mercury, Saturn or Grenadier P, Sentinel 5 & 10, Nebula 270

● Cabinets meet 4" ADA projection requirements.

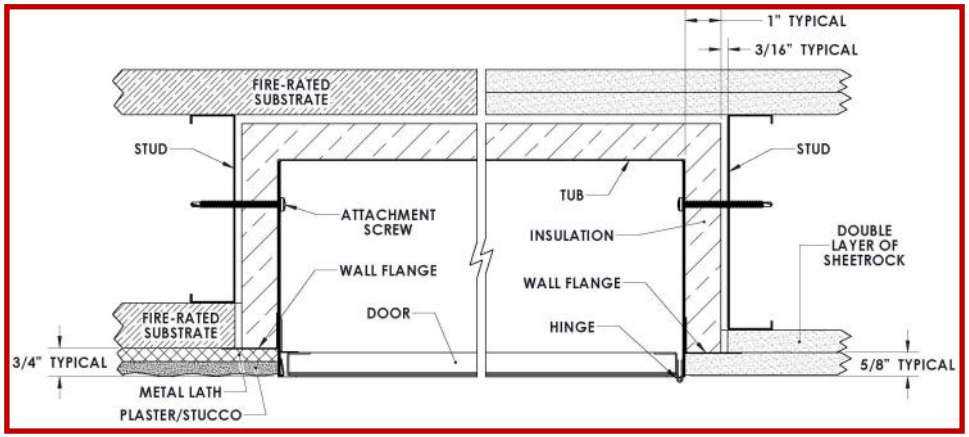

3/4" PLASTER (P) **5/8" DRYWALL (W)**

See Installation Instructions for Complete Details

ADA Cabinet Mounting

Height: Standard Pull on G, E, W, L22 and B Door Styles with Saf-T-Lok are 3 5/8" Higher than Door Center, so Allow for that When Mounting Cabinet.

Standard Pull with No Lock or Flush Pull are Centered on Door.

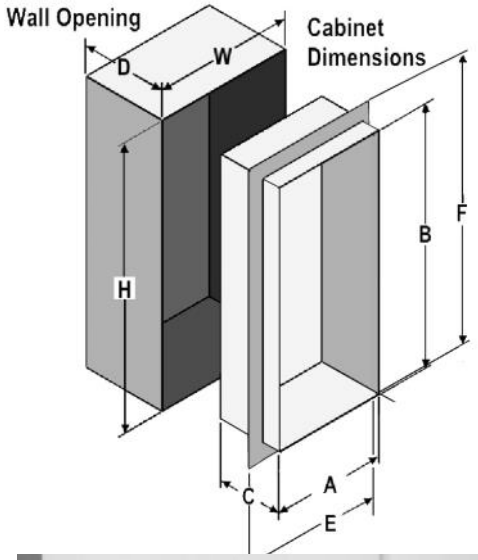

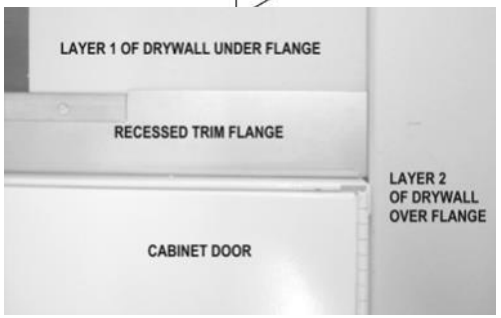

DRYWALL INSTALLATION EXAMPLE

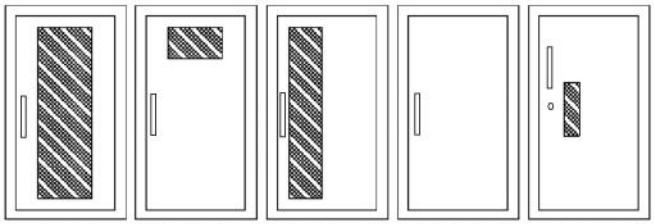

F - Full glass with pull handle
G - Full glass with pull handle and Saf-T-Lok (Not Shown)

D - Horizontal duo panel with pull handle
E - Horizontal duo panel with pull handle and Saf-T-Lok. (Not Shown)

V - Vertical duo panel with pull handle
W - Vertical duo panel with pull handle and Saf-T-Lok. (Not Shown)

S21 - Solid with pull handle
L22 - Solid with pull handle and Saf-T-Lok
L24 - Solid with cylinder key lock and no handle

B - Solid with pull handle, view window and Saf-T-Lok

@2024 Activar Construction Products Group, Inc. THE INFORMATION CONTAINED IN THIS DRAWING IS THE SOLE PROPERTY OF ACTIVAR CONSTRUCTINO PRODUCTS GROUP, INC. ANY REPRODUCTION IN PART OR AS A WHOLE WITHOUT THE WRITTEN PERMISSION OF ACTIVAR CONSTRUCTION PRODUCTS GROUP, INC IS PROHIBITED