SUBMITTAL: COSMOPOLITAN™ STAINLESS STEEL FX2™ FIRE EXTINGUISHER CABINETS TRIMLESS

The Cosmopolitan Series in Stainless Steel Is a Modern, Clean Look for Fully Recessed Cabinets. The FX2 Fire-Rated Trimless Series is Designed to be Installed Between the layers of Drywall or Under Plaster for a Flush, Finished Surface.

Door Construction: # 4 stainless steel. Flush cabinet doors are attached by a continuous hinge and equipped with zinc-plated handle and roller catch.

Flange for Drywall, Stucco or Plaster: 1-1/2" wide recessed flange is to be concealed by drywall, stucco or plaster. *5/8" Drywall* - first layer of drywall is to be installed before cabinet, second layer over flange after cabinet is installed. *3/4" depth Plaster or Stucco* - fire-rated substrate is to be installed before cabinet, and plaster applied after cabinet is installed.

Tub: The tub is constructed of cold rolled steel with silver powder-coat finish standard. Tub forms a flange to cover cut edges of wallboard material. Fire-resistant material is attached to the exterior of the tub.

Fire Rating: Fire-FX2™ cabinets are UL listed and labeled as an approved membrane penetration firestop system for up to 2 hours in accordance with UL 1479 (ASTM-E814) and CAN/ULC-S115, when properly installed in a wall assembly according to installation instructions.



8134WV10FX2

STEP 1: SELECT MODEL NUMBER AND QUANTITY ON CHART (refer to chart on pg 2)

STEP 2: SELECT DOOR STYLE WITH HANDLE Check one box below Examples on Page 2

- ☐ **F** Full Glazing in 1-1/4" wide Frame
- ☐ **G** Full Glazing with SAF-T-LOK™ in 1-1/4" Frame
- ☐ **D** Horizontal Duo Panel
- ☐ **E** Horizontal Duo Panel with SAF-T-LOK
- ☐ **S21** Solid Door
- ☐ **L22** Solid with SAF-T-LOK
- ☐ **L24** Sold with Cylinder Lock - No Handle
- ☐ **V** Vertical Duo
- ☐ **W** Vertical Duo with SAF-T-LOK
- ☐ **B** Solid with 2" x 4" View Window & SAF-T-LOK

STEP 3: SELECT DOOR GLAZING (Check one box below)

- ☐ **10** Clear Acrylic
- ☐ **13** Wire Glass with Safety Film
- ☐ **15** Bronze Acrylic
- ☐ **16** Gray Acrylic
- ☐ **17** Clear Tempered Glass
- ☐ **18** Laminated Safety Glass

STEP 4: OPTIONAL FEATURES AT ADDED COST (SELECT ANY)

- ☐ Futura "Fire" Pull ___ Mill Alum ___ Red ___ White
- ☐ Flush Recessed Pull Handle **PRH**
- ☐ Polished Chrome Handle **PUCH**
- ☐ Stainless Pull Handle **PUS-US32D**
- ☐ Optional Stainless Finish: ____#6____#7____ #8
  View Stainless Finishes Online
- ☐ Black Vertical FE Letters **LDCVBFE**
- ☐ Red Vertical FE Letters **LDCVRFE**
- ☐ White Vertical FE Letters **LDCVWFE**
- ☐ Black Horizontal FE Letters **LDCHBFE**
- ☐ Red Horizontal FE Letters **LDCHRFE**
- ☐ White Horizontal FE Letters **LDCHWFE**
- ☐ Black Vertical Decal **LDVBFE**
- ☐ Red Vertical Decal **LDVRFE**
- ☐ White Vertical Decal **LDVWFE**
- ☐ Black Horizontal Decal **LDHBFE**
- ☐ Red Horizontal Decal **LDHRFE**
- ☐ White Horizontal Decal **LDHWFE**
- ☐ **(CA)** Commander Alarm
- ☐ **(BA)** Brigadier Alarm
- ☐ Vertical Red FE Silkscreen Lettering- **SSFELVR** ___ Door ___ Glass
- ☐ Lettering: Etched on Glass, Engraved on Metal, Silkscreen; Not available for #7 or #8 finish on doors. Attach separate submittal to order.

It is the responsibility of the customer to communicate specifications and product performance requirements that are needed for their application. This document is intended to convey potential product configurations and offerings. It is not to be used to imply or represent a specification or rating, of finished products shipped. Detailed, specific submittals can be created upon request. It is the responsibility of the customer to specify product accordingly to comply with local laws, codes, and ordinances.

Established 1999 FIRE SAFETY SUPPLY OEM Distributor

800-498-3473

sales@firesafetysupply.net

www.firesafetysupply.net

Distributor:		Project:
Contractor:		Approved By:
Date:	Quantity:	Architect:
Scale: N/A	Pages: 1 of 1	Item #

@ 2024 Activar Construction Products Group, Inc.

THE INFORMATION CONTAINED IN THIS DOCUMENT IS THE SOLE PROPERTY OF ACTIVAR CONSTRUCTION PRODUCTS GROUP, INC. ANY REPRODUCTION IN PART OF AS A WHOLE WITHOUT THE WRITTEN PERMISSION OF ACTIVAR CONSTRUCTION PRODUCTS GROUP, INC. IS PROHIBITED.

3/19/2024

SUBMITTAL: COSMOPOLITAN STEEL FIRE-FX2™ FIRE EXTINGUISHER CABINETS TRIMLESS

TRIM & DOOR SERIES #			Tub I.D.			Frame O.D.		Wall Opening			
QTY	Model	Trim Style	A Width	B Height	C Depth	E Width	F Height	W Width	H Height	D Depth	FITS FIRE EXTINGUISHERS
TRIMLESS CABINET WITH RECESSED FLANGE FOR INSTALLATION OF 5/8" DRYWALL OVER AND UNDER FLANGE Example of Part # 8134WF10FX2											
	8134W_FX2	Trimless● Drywall	9	18	5 1/2	12 1/8	21 1/8	11 5/16	20 5/16	6 3/16	Cosmic & Galaxy 2 1/2-6 (6lb must be mounted on cabinet tub), Mercury 2 1/2- 5
	1034W_FX2	Trimless● Drywall	10 1/2	24	6	13 5/8	27 1/8	12 13/16	26 5/16	6 11/16	Cosmic & Galaxy 2 1/2-10 Mercury 2 1/2-5 , Sentinel 5
	2034W_FX2	Trimless● Drywall	12	27	7 3/4	15 1/8	30 1/8	14 5/16	29 5/16	8 7/16	Any Cosmic or Galaxy (20 lb must be mounted to back of tub), Mercury, Saturn or Grenadier P, Sentinel 5 & 10, Nebula 270
TRIMLESS CABINET WITH RECESSED FLANGE FOR INSTALLATION OF 3/4" PLASTER OVER FLANGE Example of Part # 1034PF10FX2											
	8134P_FX2	Trimless● Plaster	9	18	5 1/2	12 1/8	21 1/8	11 5/16	20 5/16	6 1/16	Cosmic & Galaxy 2 1/2-6 (6lb must be mounted on cabinet tub), Mercury 2 1/2- 5
	1034P_FX2	Trimless● Plaster	10 1/2	24	6	13 5/8	27 1/8	12 13/16	26 5/16	6 9/16	Cosmic & Galaxy 2 1/2-10 Mercury 2 1/2-5 , Sentinel 5
	2034P_FX2	Trimless● Plaster	12	27	7 3/4	15 1/8	30 1/8	14 5/16	29 5/16	8 5/16	Any Cosmic or Galaxy (20 lb must be mounted to back of tub), Mercury, Saturn or Grenadier P, Sentinel 5 & 10, Nebula 270

● Cabinets meet 4" ADA projection requirements.

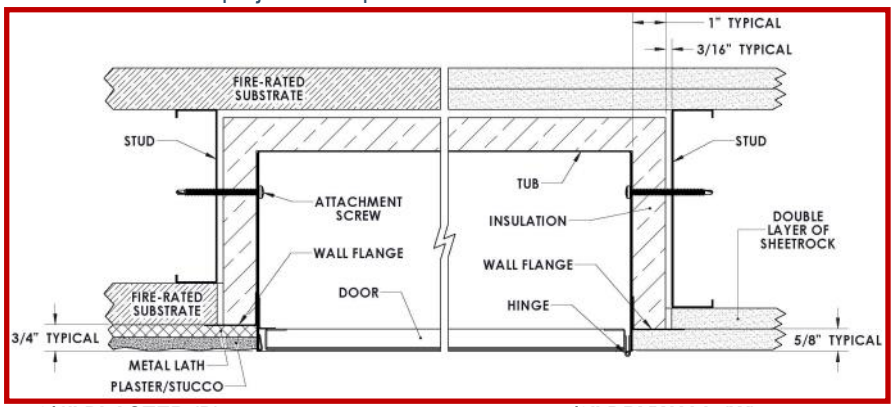

3/4" PLASTER (P) **5/8" DRYWALL (W)**

See Installation Instructions for Complete Details

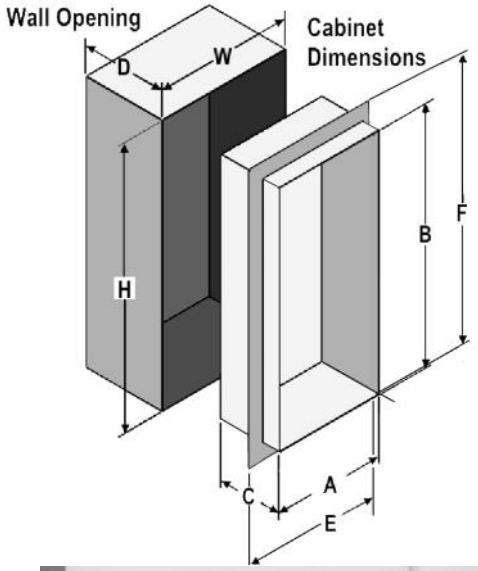

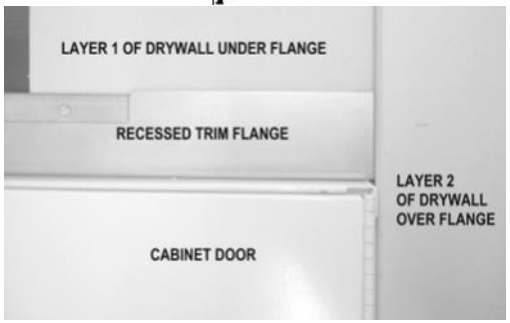

DRYWALL INSTALLATION EXAMPLE

ADA Cabinet Mounting Height:
Standard Pull on G, E, W, L22 and B Door Styles with Saf-T-Lok are 3 5/8" Higher than Door Center, so Allow for that When Mounting Cabinet.

Standard Pull with No Lock or Flush Pull are Centered on Door.

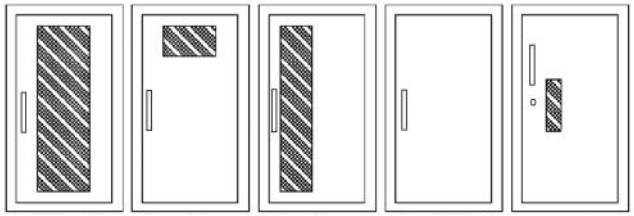

F - Full glass with pull handle G - Full glass with pull handle and Saf-T-Lok (Not Shown)

D - Horizontal duo panel with pull handle E - Horizontal duo panel with pull handle and Saf-T-Lok. (Not Shown)

V - Vertical duo panel with pull handle W - Vertical duo panel with pull handle and Saf-T-Lok. (Not Shown)

S21 - Solid with pull handle L22 - Solid with pull handle and Saf-T-Lok L24 - Solid with cylinder key lock and no handle

B - Solid with pull handle, view window and Saf-T-Lok

@2024 Activar Construction Products Group, Inc. THE INFORMATION CONTAINED IN THIS DRAWING IS THE SOLE PROPERTY OF ACTIVAR CONSTRUCTINO PRODUCTS GROUP, INC. ANY REPRODUCTION IN PART OR AS A WHOLE WITHOUT THE WRITTEN PERMISSION OF ACTIVAR CONSTRUCTION PRODUCTS GROUP, INC IS PROHIBITED