SUBMITTAL: COSMOPOLITAN™ STAINLESS STEEL FIRE EXTINGUISHER CABINETS TRIMLESS



The Cosmopolitan Series in Stainless Steel is a Modern, Clean Look, Fully Recessed Steel Cabinet that Stands up to Conditions in Commercial Buildings. Designed to be Installed Over Drywall, or Under Plaster for a Flush Finished Surface.

Door Construction: #4 finish stainless steel. Flush cabinet doors are attached by a continuous hinge and equipped with zinc-plated handle and roller catch.

Concealed Flange Style: *Drywall bead for installation over drywall or plaster flange with stop with 3/4" plaster flange.*

Tub: The tub is constructed of cold rolled steel with silver powder-coat finish standard. Tub includes a 1-1/4" wide flange to cover the wall opening, and is designed to be concealed by drywall, plaster or stucco.

Fire-Rated Option Available: Yes - See separate Submittal Form. (Note FX version is designed to be installed between layers of drywall)

STEP 1: SELECT MODEL NUMBER AND QUANTITY ON CHART (refer to chart on pg 2)

A. Determine Trim Style for Either Wallboard or Plaster Walls. **B.** Determine Tub I.D. according to size most suited for extinguisher and wall opening.

STEP 2: SELECT DOOR STYLE WITH HANDLE Check one box below Examples on Page 2

- ☐ **F** Full Glazing in 1-1/4" wide Frame
- ☐ **G** Full Glazing with SAF-T-LOK™ in 1-1/4" Frame
- ☐ **D** Horizontal Duo Panel
- ☐ **E** Horizontal Duo Panel with SAF-T-LOK
- ☐ **S21** Solid Door
- ☐ **L22** Solid with SAF-T-LOK
- ☐ **L24** Sold with Cylinder Lock - No Handle
- ☐ **V** Vertical Duo
- ☐ **W** Vertical Duo with SAF-T-LOK
- ☐ **B** Solid with 2" x 4" View Window & SAF-T-LOK

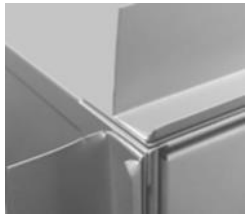

Plaster Flange



Drywall Bead Flange

STEP 3: SELECT DOOR GLAZING (Check one box below)

- ☐ **10** Clear Acrylic
- ☐ **13** Wire Glass with Safety Film
- ☐ **15** Bronze Acrylic
- ☐ **16** Gray Acrylic
- ☐ **17** Clear Tempered Glass
- ☐ **18** Laminated Safety Glass

STEP 4: OPTIONAL FEATURES AT ADDED COST (SELECT ANY)

- ☐ Futura "Fire" Pull ___ Mill Alum ___ Red ___ White
- ☐ Flush Recessed Pull Handle **PRH**
- ☐ Polished Chrome Handle **PUCH**
- ☐ Stainless Pull Handle **PUS-US32D**
- ☐ Other Stainless Finish: ___#6 ___#7 ___#8
- ☐ Black Vertical FE Letters **LDCVBFE**
- ☐ Red Vertical FE Letters **LDCVRFE**
- ☐ White Vertical FE Letters **LDCVWFE**
- ☐ Black Horizontal FE Letters **LDCHBFE**
- ☐ Red Horizontal FE Letters **LDCHRFE**
- ☐ White Horizontal FE Letters **LDCHWFE**
- ☐ Black Vertical Decal **LDVBFE**
- ☐ Red Vertical Decal **LDVRFE**
- ☐ White Vertical Decal **LDVWFE**
- ☐ Black Horizontal Decal **LDHBFE**
- ☐ Red Horizontal Decal **LDHRFE**
- ☐ White Horizontal Decal **LDHWFE**
- ☐ **(CA)** Commander Alarm
- ☐ **(BA)** Brigadier Alarm
- ☐ Vertical Red FE Silkscreen Lettering- **SSFELVR** ___ Door ___ Glass
- ☐ Lettering: Etched on Glass, Engraved on Metal, Silkscreen; Not available for #7 or #8 finish on doors. Attach separate submittal to order.

It is the responsibility of the customer to communicate specifications and product performance requirements that are needed for their application. This document is intended to convey potential product configurations and offerings. It is not to be used to imply or represent a specification or rating, of finished products shipped. Detailed, specific submittals can be created upon request. It is the responsibility of the customer to specify product accordingly to comply with local laws, codes, and ordinances.

Established 1999 FIRE SAFETY SUPPLY OEM Distributor

800-498-3473

sales@firesafetysupply.net

www.firesafetysupply.net

Distributor:		Project:
Contractor:		Approved By:
Date:	Quantity:	Architect:
Scale: N/A	Pages: 1 of 2	Item #

@ 2024 Activar Construction Products Group, Inc.

THE INFORMATION CONTAINED IN THIS DOCUMENT IS THE SOLE PROPERTY OF ACTIVAR CONSTRUCTION PRODUCTS GROUP, INC. ANY REPRODUCTION IN PART OF AS A WHOLE WITHOUT THE WRITTEN PERMISSION OF ACTIVAR CONSTRUCTION PRODUCTS GROUP, INC. IS PROHIBITED.

3/20/2024

SUBMITTAL: COSMOPOLITAN™ STAINLESS STEEL FIRE EXTINGUISHER CABINETS TRIMLESS

TRIM & DOOR SERIES #			Tub I.D.			Frame O.D.		Wall Opening			Fits Fire Extinguishers
QTY	Model	Trim Style	A Width	B Height	C Depth	E Width	F Height	W Width	H Height	D Depth	
TRIMLESS CABINET WITH DRYWALL BEAD FLANGE FOR INSTALLATION OVER DRYWALL Example of Part # 8134WF10											
	8134W	Trimless Drywall●	9	18	5 1/2	11 1/2	20 1/2	10	19	5 5/8	Cosmic & Galaxy 2 1/2-6 (6lb must be mounted on cabinet tub), Mercury 2 1/2- 5
	1034W	Trimless Drywall●	10 1/2	24	6	13	26 1/2	11 1/2	25	6 1/8	Cosmic & Galaxy 2 1/2-10 Mercury 2 1/2-5 , Sentinel 5
	2034W	Trimless Drywall●	12	27	7 3/4	14 1/2	29 1/2	13	28	7 7/8	Any Cosmic**, Galaxy**, Mercury, Saturn or Grenadier P, Sentinel 5 & 10, Nebula 270
TRIMLESS CABINET WITH RECESSED FLANGE FOR INSTALLATION OF 3/4" PLASTER OVER FLANGE Example of Part # 8134PF10											
	8134P	Trimless Plaster ●	9	18	5 1/2	11 1/2	20 1/2	10	19	4 7/8	Cosmic & Galaxy 2 1/2-6 (6lb must be mounted on cabinet tub), Mercury 2 1/2- 5
	1034P	Trimless Plaster●	10 1/2	24	6	13	26 1/2	11 1/2	25	5 3/8	Cosmic & Galaxy 2 1/2-10 Mercury 2 1/2-5 , Sentinel 5
	2034P	Trimless Plaster●	12	27	7 3/4	14 1/2	29 1/2	13	28	7 1/8	Any Cosmic**, Galaxy**, Mercury, Saturn or Grenadier P, Sentinel 5 & 10, Nebula 270

** Cosmic 20 and Galaxy 20 Extinguisher must be mounted on the back of the cabinet tub

● All Cabinets meet 4" ADA projection requirements.

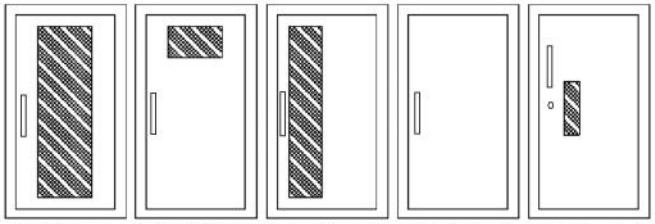

F - Full glass with pull handle G - Full glass with pull handle and Saf-T-Lok (Not Shown)

D - Horizontal duo panel with pull handle E - Horizontal duo panel with pull handle and Saf-T-Lok. (Not Shown)

V - Vertical duo panel with pull handle W - Vertical duo panel with pull handle and Saf-T -Lok. (Not Shown)

S21 - Solid with pull handle L22 - Solid with pull handle and Saf-T-Lok L24 - Solid with cylinder key lock and no handle

B - Solid with pull handle, view window and Saf-T -Lok

ADA Cabinet Mounting Height: Standard Pull on G, E, W, L22 and B Door Styles with Saf-T-Lok are 3 5/8" Higher than Door Center, so Allow for that When Mounting Cabinet.

Standard Pull with No Lock or Flush Pull are Centered on Door.

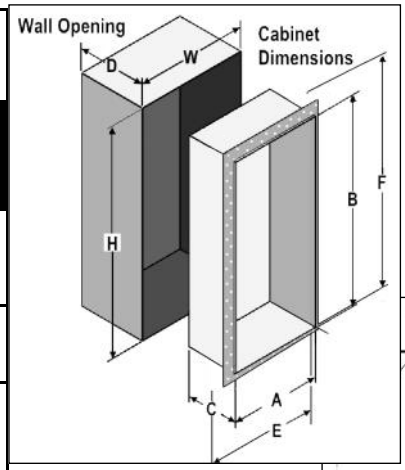



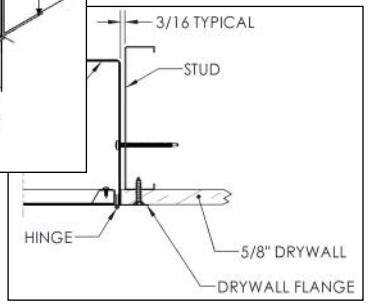

TRIMLESS FLANGE FOR 5/8" DRYWALL (W)

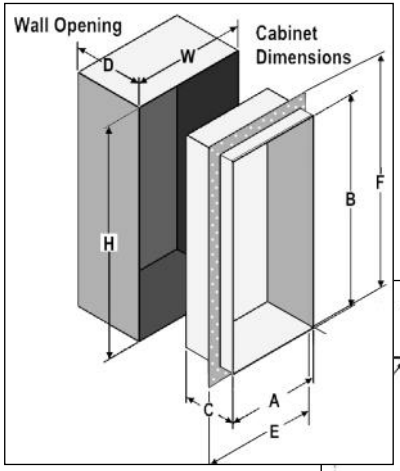



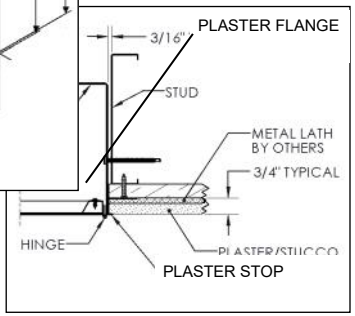

TRIMLESS RECESSED FLANGE FOR 3/4" PLASTER (P)

@2024 Activar Construction Products Group, Inc. THE INFORMATION CONTAINED IN THIS DRAWING IS THE SOLE PROPERTY OF ACTIVAR CONSTRUCTINO PRODUCTS GROUP, INC. ANY REPRODUCTION IN PART OR AS A WHOLE WITHOUT THE WRITTEN PERMISSION OF ACTIVAR CONSTRUCTION PRODUCTS GROUP, INC IS PROHIBITED